USN | | | | | | | | | | |

RV COLLEGE OF ENGINEERING®

(An Autonomous Institution affiliated to VTU)

III Semester B. E. Examinations Nov/Dec-19

Electronics and Communication Engineering

ANALOG MICROELECTRONIC CIRCUITS

Time: 03 Hours ***Maximum Marks: 100***

Instructions to candidates:

1. Answer all questions from Part A. Part A questions should be answered in first three pages of the answer book only.
2. Answer FIVE full questions from Part B. In Part B question number 2, 7 and 8 are compulsory. Answer any one full question from 3 and 4 & one full question from 5 and 6

PART-A

1	1.1	For a MOS transistor, if aspect ratio is increased 36 times while maintaining its drain current constant, its transconductance will increase by a factor of _____.	01
	1.2	The impedance seen between terminals A and B in the Fig. 1.2 is _____. 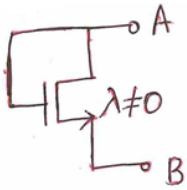 Fig. 1.2	02
	1.3	A common emitter transistor amplifier has thermal voltage of $25mV$, collector current of $1.0mA$ and base current of $25\mu A$ at room temperature. Its input resistance is approximately _____	02
	1.4	Resistance R_0 as seen by the output terminals in the circuit shown in Fig. 1.4 = _____. Let $= 99, R_1 = R_2 = r_0 = \infty, r_\pi = 1K\Omega$.	02
	1.5	The current steering circuit of Fig. 1.5 uses devices having equal channel length but widths $w_1 = 5\mu m$, $w_2 = 15\mu m, w_3 = 20\mu m$ and $w_4 = 50\mu m$. The value of $I_0 =$ _____. 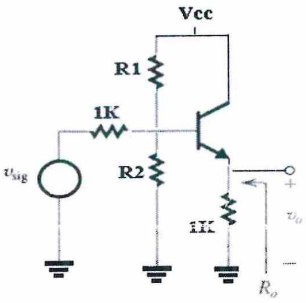 Fig. 1.4 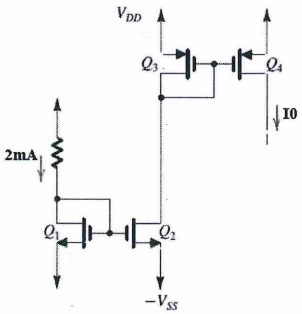 Fig. 1.5 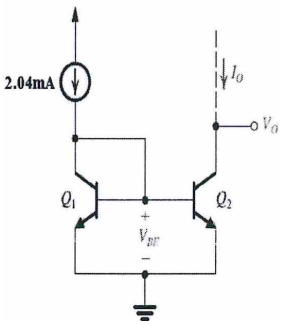 Fig. 1.6	02
	1.6	Find Io in the circuit shown in Fig. 1.6 assuming $\beta = 100$ for the transistors.	01
	1.7	A Wilson mirror uses identical $BJTs$. The transistors have $\beta = 100$ and $r_0 = 200K\Omega$, the output impedance of the current source = _____.	01

1.8	The intrinsic gain of a BJT, whose early voltage is $26V$ at $27°C$ = _____.	01
1.9	For the circuit shown in Fig. 1.9, the output voltage = _____. Let $V_1 = 4V$ and $V_2 = 5V$ 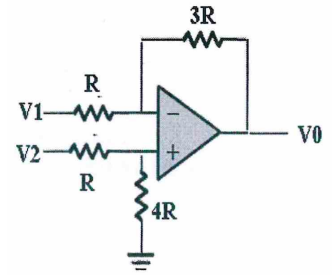 Fig. 1.9 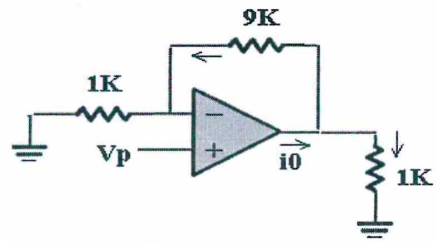 Fig. 1.10	02
1.10	Consider the amplifier circuit shown in Fig. 1.10. The op-amp is specified to have output saturation voltages of $\pm 13V$, the output current , i_0 = _____ for $V_p = 1V$	02
1.11	A dual supply of $12V$ is used in a complementary symmetry class B power amplifier with load 8Ω. The maximum power output possible = _____.	01
1.12	The maximum efficiency of a class B power amplifier is _____%	01
1.13	In a voltage shunt negative feedback, input impedance _____ by a factor $(1 + A\beta)$.	01
1.14	An amplifier has an open loop gain of $60dB$ and an input impedance of $500K\Omega$. If 4.9% voltage shunt negative feedback is provided to this amplifier, the input impedance of closed loop amplifier = _____.	01

PART-B

2	a	Explain the phenomenon of channel length modulation in $MOSFETs$. Draw the $I_D - V_{DS}$ characteristics and show the effect of channel length modulation.	06
	b	In the CS amplifier circuit of Fig. 2.b, determine: i) I_D ii) Voltage gain v_o/v_i iii) v_o/v_S iv) input impedance v) output impedance vi) The maximum peak value of the signal V_S which can be amplified without distortion. Let $K_n'(W/L) = 1.5mA/V^2$, $V_t = 1V, \lambda = 0$ 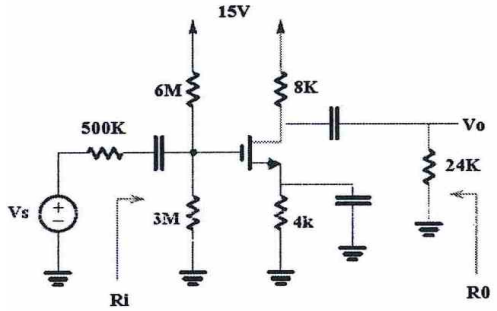 Fig. 2.b 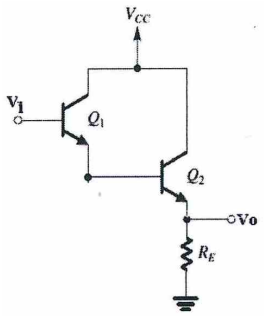 Fig. 3.a	10

3	a	Draw the small signal equivalent for the circuit shown in Fig. 3.a and derive the expressions for voltage gain v_o/v_i, the input and output impedances.	08
	b	Design the circuit shown in Fig. 3b so that $V_{CE} = 6V$, $I_E = 1mA$, $S_{(ICO)} = 10$ and $v_o/v_i = -100$. Assume $\beta = 99$ for the transistor. 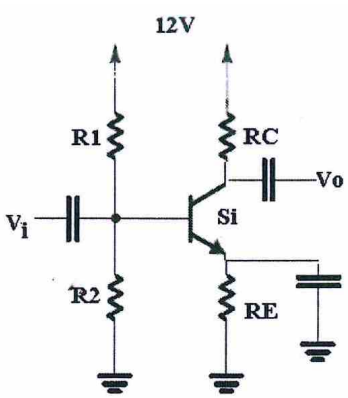 Fig. 3.b 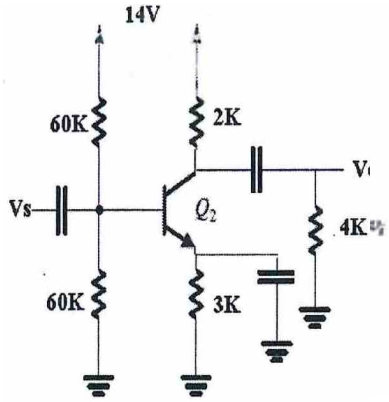 Fig. 4.a 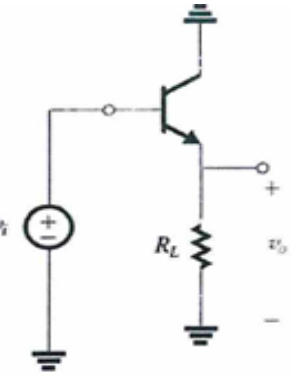 Fig. 4.b	08
		OR	
4	a	Find the operating point of the Si NPN transistor, the small signal voltage gain V_o/V_s, R_{in} and R_{out} for the amplifier circuit shown in Fig. 4.a. Let $r_o = \infty$	08
	b	Draw small signal equivalent circuit for the circuit shown in Fig. 4.b and derive expressions for Voltage gain, input impedance and output impedance considering Channel length modulation.	08
5	a	Derive an expression for the output impedance of Wilson Mirror using $MOSFETs$.	08
	b	Design the values of R_c and R_E, in the circuit shown in Fig. 5.b so that the operating point is fixed at $V_{CE} = 5V$, $I_c = 2mA$, $S_{(ICO)} = 12$, $v_o/v_S = -120$. Also find the values of C_1, C_2 and C_E such that lower cut of frequencies due to C_1, C_2 and C_E are $10Hz, 10Hz$ and $100Hz$ respectively. Let $\beta = 89$ and $r_0 = 20K\Omega$. 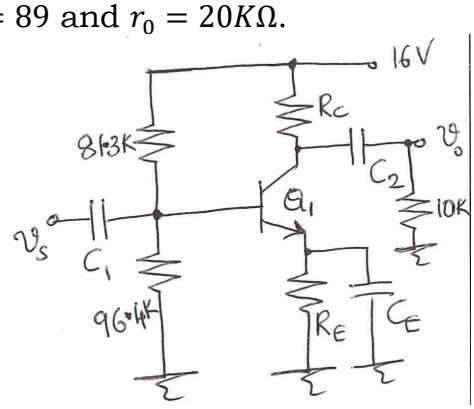 Fig. 5.b	08
		OR	

6	a	For the RC coupled Common source amplifier shown in the Fig. 6.a, find higher cut off frequencies due to input and output capacitance. Let $C_{gs} = 2pF$, $C_{gd} = 0.4pF$, $C_{C1} = C_{C2} = 0.01\mu F$, $C_S = 10\mu F$, $V_t = 1V$, $K_n'(W/L) = 0.5mA/V^2, r_0 = 23.8K\Omega$ and $g_m = 1.45mA/V$ 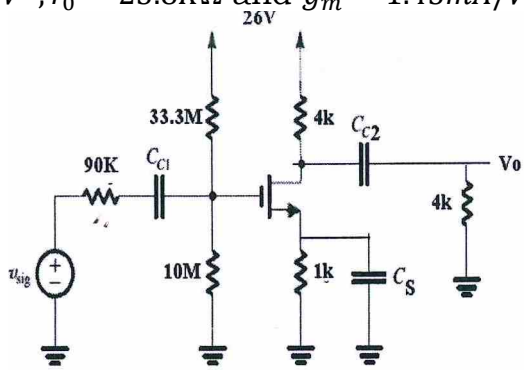 Fig. 6.a	08
	b	Draw the circuit of Wilson current mirror using bipolar transistor and show that the output current is almost independent of β	08
7	a	Design a Schmitt trigger with UTP and LTP as $3V$ and $1V$ respectively. Let $V_{cc} = 12V$ and $-V_{cc} = -12V$. Draw the circuit diagram and label the component values.	08
	b	Design a difference amplifier to get $A_d = 40dB$, $A_{cm} = 0$, $R_{id} = 15K\Omega$. Find the worst case $CMRR$ if resistors are 2% tolerance.	08
8	a	With the help of a neat schematic, prove that input and output impedances of an amplifier varies by a factor of $(1 + A\beta)$ with voltage series negative feedback.	08
	b	Prove that the conversion efficiency in a class B power output stage is 50%, when the power dissipation in the transistors is maximum.	08